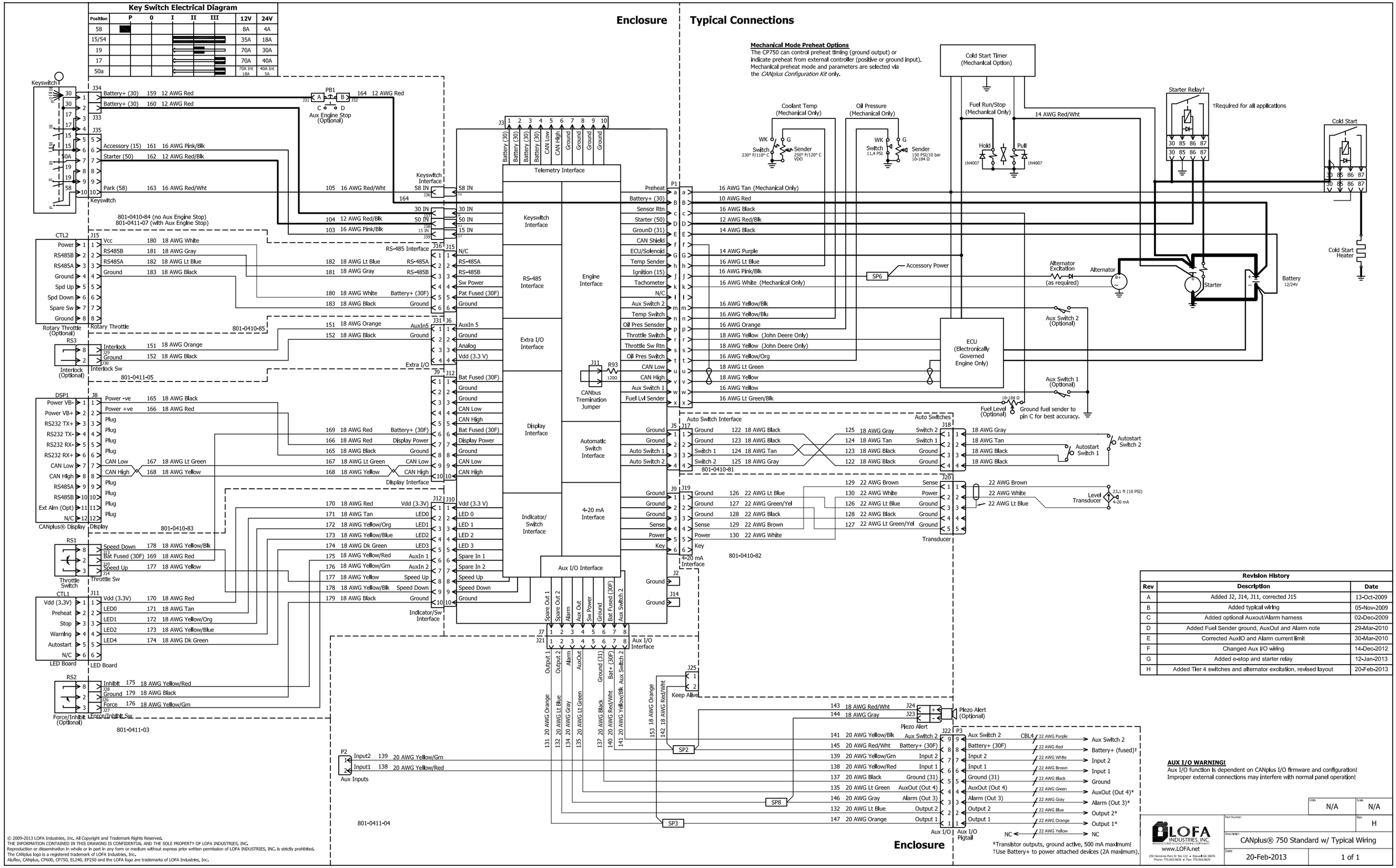
Key Switch Electrical Diagram
Position | P | 0 | I | II | III | 12V | 24V
58 | 8A | 4A
15/54 | 35A | 18A
19 | 70A | 30A
17 | 70A | 40A
50a | 70A Int 18A | 40A Int 5A
Enclosure
Typical Connections
Mechanical Mode Preheat Options
The CP750 can control preheat timing (ground output) or indicate preheat from external controller (positive or ground input). Mechanical preheat mode and parameters are selected via the CANplus Configuration Kit only.
Keyswitch
Battery+ (30) 159 12 AWG Red
Battery+ (30) 160 12 AWG Red
Accessory (15) 161 16 AWG Pink/Blk
Starter (50) 162 12 AWG Red/Blk
Park (58) 163 16 AWG Red/Wht
Aux Engine Stop (Optional)
801-0410-84 (no Aux Engine Stop)
801-0411-07 (with Aux Engine Stop)
CTL2
Rotary Throttle (Optional)
Interlock (Optional)
801-0410-85
801-0411-05
DSP1
CANplus® Display
801-0410-83
RS1
Throttle Switch
CTL1
LED Board
RS2
Force/Inhibit (Optional)
801-0411-03
Telemetry Interface
Keyswitch Interface
RS-485 Interface
Extra I/O Interface
Display Interface
Indicator/ Switch Interface
Engine Interface
CANbus Tremination Jumper
Automatic Switch Interface
4-20 mA Interface
Aux I/O Interface
Preheat
Battery+ (30)
Sensor Rtn
Starter (50)
GrounD (31)
CAN Shield
ECU/Solenoid
Temp Sender
Ignition (15)
Tachometer
N/C
Aux Switch 2
Temp Switch
Oil Pres Sensder
Throttle Switch
Throttle Sw Rtn
Oil Pres Switch
CAN Low
CAN High
Aux Switch 1
Fuel Lvl Sender
Auto Switch Interface
Auto Switches
801-0410-81
4-20 mA Interface
801-0410-82
Coolant Temp (Mechanical Only)
Oil Pressure (Mechanical Only)
Cold Start Timer (Mechanical Option)
Fuel Run/Stop (Mechanical Only)
Starter Relay†
†Required for all applications
Cold Start
Cold Start Heater
Battery 12/24V
Alternator
Alternator Excitation (as required)
Accessory Power
Starter
Aux Switch 2 (Optional)
Aux Switch 1 (Optional)
ECU (Electronically Governed Engine Only)
Fuel Level (Optional)
Ground fuel sender to pin C for best accuracy.
Autostart Switch 1
Autostart Switch 2
Level Transducer
Transducer
Aux I/O Interface
Aux I/O Pigtail
Piezo Alert (Optional)
Keep Alive
Aux Inputs
801-0411-04
*Transistor outputs, ground active, 500 mA maximum!
†Use Battery+ to power attached devices (2A maximum).
Revision History
Rev | Description | Date
A | Added J2, J14, J11, corrected J15 | 13-Oct-2009
B | Added typical wiring | 05-Nov-2009
C | Added optional Auxout/Alarm harness | 02-Dec-2009
D | Added Fuel Sender ground, AuxOut and Alarm note | 29-Mar-2010
E | Corrected AuxIO and Alarm current limit | 30-Mar-2010
F | Changed Aux I/O wiring | 14-Dec-2012
G | Added e-stop and starter relay | 12-Jan-2013
H | Added Tier 4 switches and alternator excitation, revised layout | 20-Feb-2013
AUX I/O WARNING!
Aux I/O function is dependent on CANplus I/O firmware and configuration!
Improper external connections may interfere with normal panel operation!
LOFA INDUSTRIES, INC.
www.LOFA.net
Units N/A
Scale N/A
Rev H
CANplus® 750 Standard w/ Typical Wiring
Date 20-Feb-2013
1 of 1
© 2009-2013 LOFA Industries, Inc. All Copyright and Trademark Rights Reserved.
THE INFORMATION CONTAINED IN THIS DRAWING IS CONFIDENTIAL AND THE SOLE PROPERTY OF LOFA INDUSTRIES, INC.
Reproduction or dissemination in whole or in part in any form or medium without express prior written permission of LOFA INDUSTRIES, INC. is strictly prohibited.
The CANplus logo is a registered trademark of LOFA Industries, Inc.
Aliflex, CANplus, CP600, CP750, EL240, EP250 and the LOFA logo are trademarks of LOFA Industries, Inc.